Cambridge International Examinations
Cambridge International General Certificate of Secondary Education

CANDIDATE NAME	

CENTRE NUMBER						CANDIDATE NUMBER					

7774192182

BIOLOGY **0610/41**

Paper 4 Theory (Extended) **May/June 2016**

1 hour 15 minutes

Candidates answer on the Question Paper.

No Additional Materials are required.

READ THESE INSTRUCTIONS FIRST

Write your Centre number, candidate number and name on all the work you hand in.
Write in dark blue or black pen.
You may use an HB pencil for any diagrams or graphs.
Do not use staples, paper clips, glue or correction fluid.
DO **NOT** WRITE IN ANY BARCODES.

Answer **all** questions.

Electronic calculators may be used.
You may lose marks if you do not show your working or if you do not use appropriate units.

At the end of the examination, fasten all your work securely together.
The number of marks is given in brackets [ ] at the end of each question or part question.

This document consists of **20** printed pages.

CAMBRIDGE
International Examinations

© UCLES 2016

1 **(a)** Fig. 1.1 shows the human heart and the main blood vessels. The functions of the parts of the heart and some of the blood vessels are given in Table 1.1.

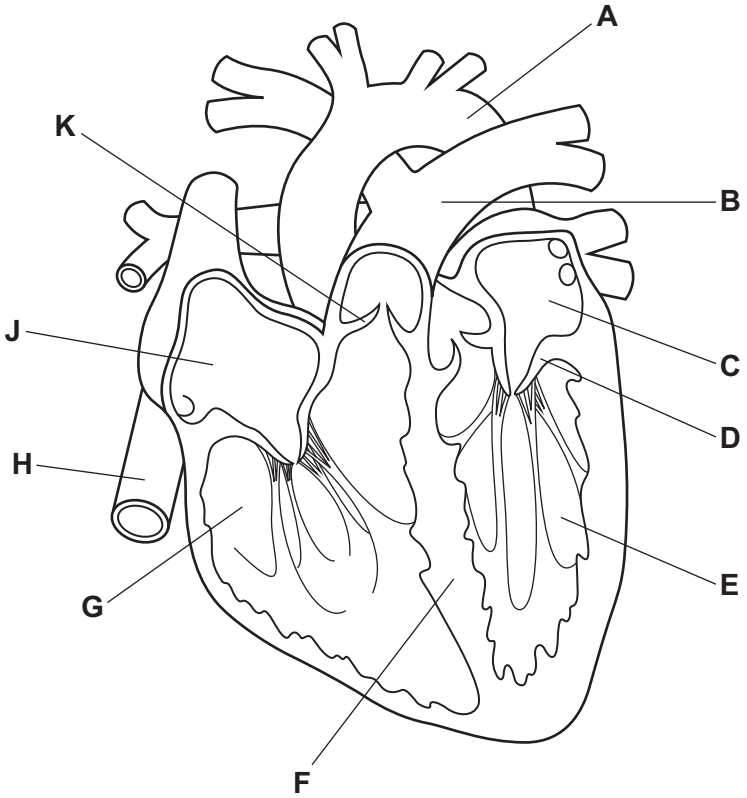

Fig. 1.1

Complete Table 1.1.

One row has been done for you.

Table 1.1

function	letter on Fig. 1.1	name
structure that separates oxygenated and deoxygenated blood		
structure that prevents backflow of blood from ventricle to atrium		
blood vessel that carries oxygenated blood	**A**	aorta
blood vessel that carries deoxygenated blood		
structure that prevents backflow of blood from pulmonary artery to right ventricle		
chamber of the heart that contains oxygenated blood		
chamber of the heart that contains deoxygenated blood		

[6]

(b) A group of students used a heart monitor to record the pulse rate of an athlete during a 5000 metre race. The recordings started just before the race began and ended just after it had finished, as shown in Fig. 1.2.

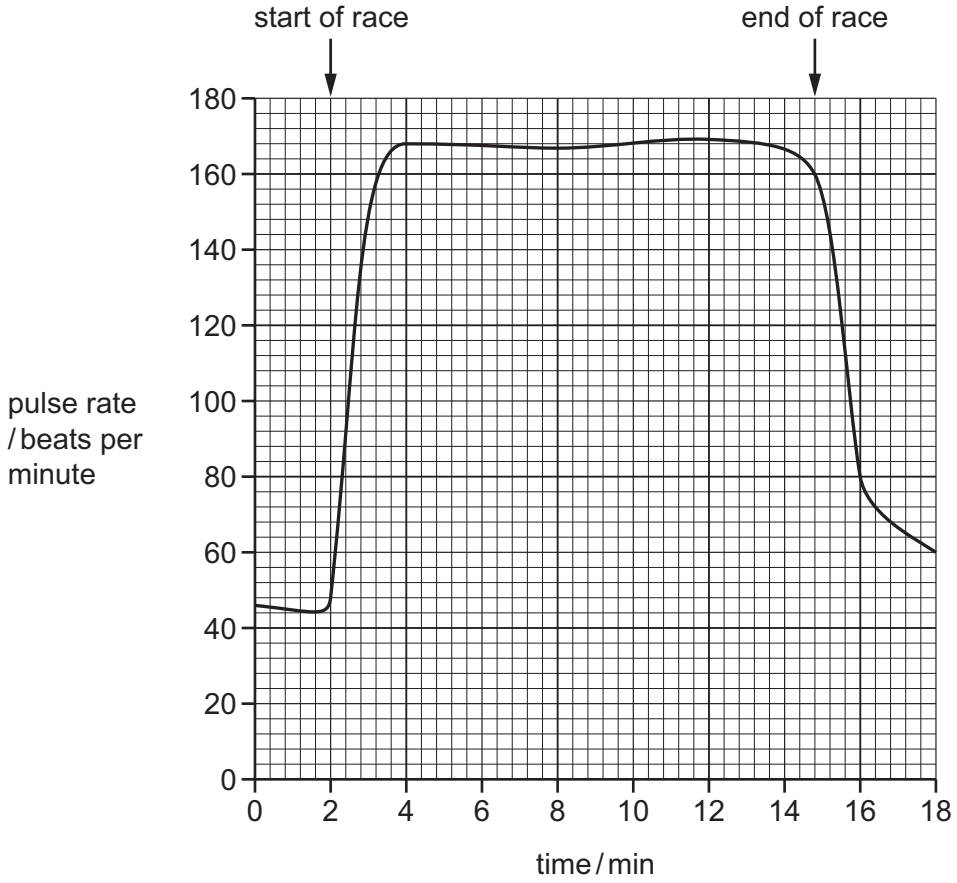

Fig. 1.2

(i) Use data from Fig. 1.2 to describe the effect of exercise on the pulse rate of the athlete.

.....

.....

.....

.....

.....

.....

..... [3]

(ii) Explain the change in pulse rate between 2 minutes and 3 minutes after the recordings started.

.....

.....

.....

.....

.....

.....

.....

.....

..... [4]

[Total: 13]

2 The nervous system coordinates the responses of animals to changes in their environment.

(a) Fig. 2.1 shows the arrangement of the nervous system in a mammal.

Complete Fig. 2.1 by writing the names of the missing parts of the mammalian nervous system in the boxes.

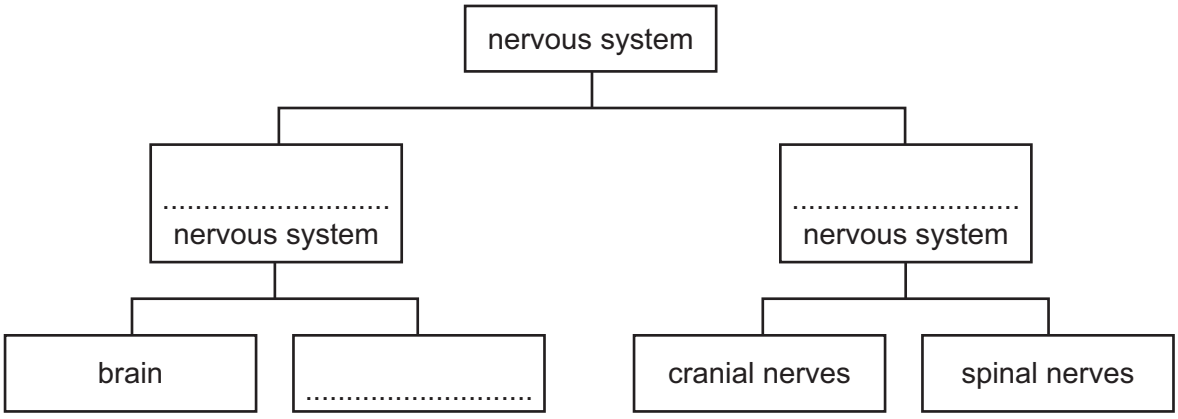

Fig. 2.1

[3]

(b) Fig. 2.2 is a flow chart that shows how an involuntary action is controlled.

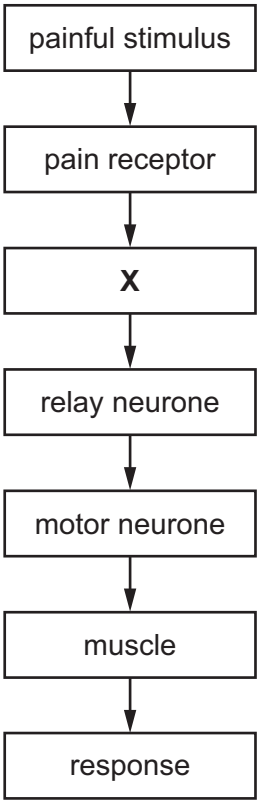

Fig. 2.2

(i) State the structure found at **X**.

..... [1]

(ii) State the type of involuntary action shown by the flow chart.

..... [1]

(iii) State **two** ways in which a voluntary action differs from an involuntary action.

1 .....

.....

2 .....

.....

[2]

(c) Fig. 2.3 shows three pots of seedlings that have been kept in different conditions.

pot **P** pot **Q** pot **R**

Fig. 2.3

(i) State the conditions in which pots **P** and **Q** were kept.

P .....

Q.....

[1]

(ii) State the name of the growth response shown by the seedlings in pot **R**.

..... [2]

© UCLES 2016

(iii) Explain the advantage to the seedlings of this growth response.

.....

.....

.....

.....

..... [2]

(iv) Auxins control the growth responses of seedlings.

Explain how auxins control the growth response of the seedlings in pot **R**.

.....

.....

.....

.....

.....

.....

.....

.....

..... [4]

[Total: 16]

3 Catalase is an enzyme that breaks down hydrogen peroxide inside cells. Red blood cells contain catalase.

Some dogs have an inherited condition in which catalase is not produced. This condition is known as acatalasia and it is caused by a mutation in the gene for catalase.

(a) Define the terms *gene* and *gene mutation*.

gene.....

.....

gene mutation.....

.....

[2]

(b) A geneticist was asked to investigate the inheritance of acatalasia in dogs.

The normal allele is represented by **B** and the mutant allele is represented by **b**.

The geneticist made the diagram in Fig. 3.1 to show the inheritance of acatalasia in a family of dogs. The shaded symbols indicate the dogs with acatalasia.

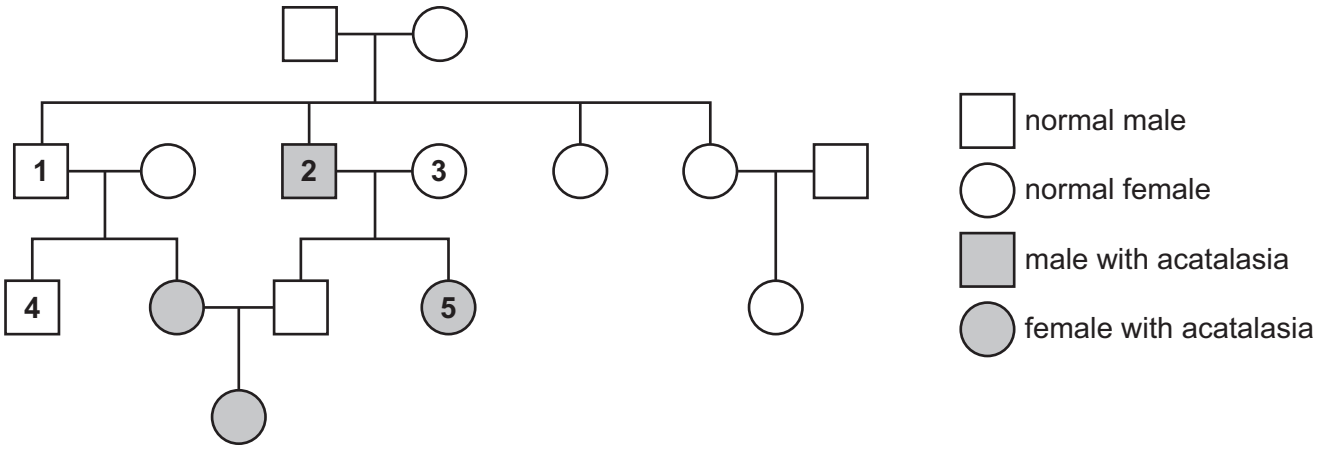

Fig. 3.1

(i) State the genotypes of the dogs identified as **1**, **2** and **3** in Fig. 3.1.

1 .....

2 .....

3 ..... [3]

(ii) The geneticist crossed dog **4** with dog **5**. Approximately half of the offspring had acatalasia and half the offspring did not have acatalasia.

Complete the genetic diagram to show how this is possible.

	dog **4**		dog **5**
parental phenotypes	normal		has acatalasia
parental genotypes	.....		.....
gametes	..... , ...	+	.....

Punnett square

offspring genotypes.....

offspring phenotypes..... [3]

(iii) State the name given to the type of cross that you have completed in **(b)(ii)**.

..... [1]

[Total: 9]

4 *Rhabdostyla* is a single-celled organism that has no cell wall and no chlorophyll.

(a) Gases are exchanged across the cell membrane of *Rhabdostyla*.

Name:

the gas produced by *Rhabdostyla* .....

the process that produces the gas .....

the method of removal of the gas .....

[3]

Rhabdostyla lives in freshwater habitats, such as ponds, lakes and rivers.

Freshwater has a very low concentration of solutes.

Rhabdostyla has a contractile vacuole that fills with water and empties at intervals as shown in Fig. 4.1. The contractile vacuole removes excess water.

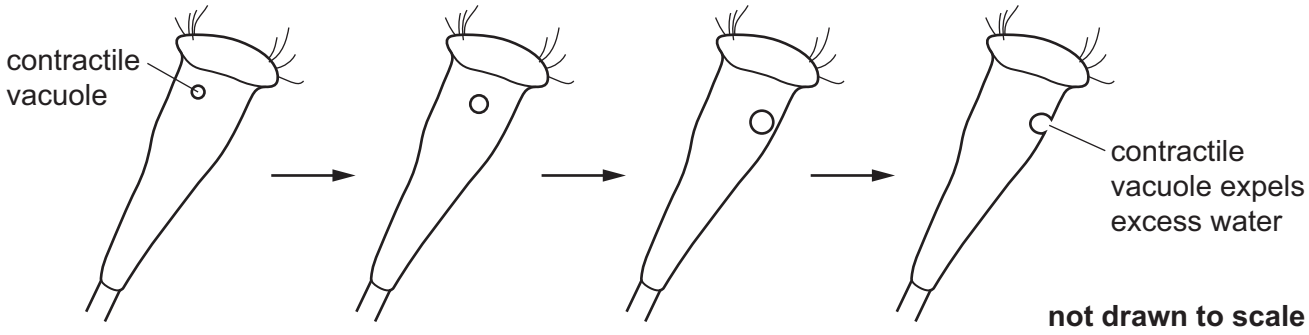

Fig. 4.1

(b) Explain, using the term **water potential**, why *Rhabdostyla* needs to remove excess water.

.....

.....

.....

.....

.....

.....

..... [3]

In an investigation, individual *Rhabdostyla* were placed into different concentrations of sea water. The rate of water excreted by the contractile vacuole of each organism was determined. The results are shown in Fig. 4.2.

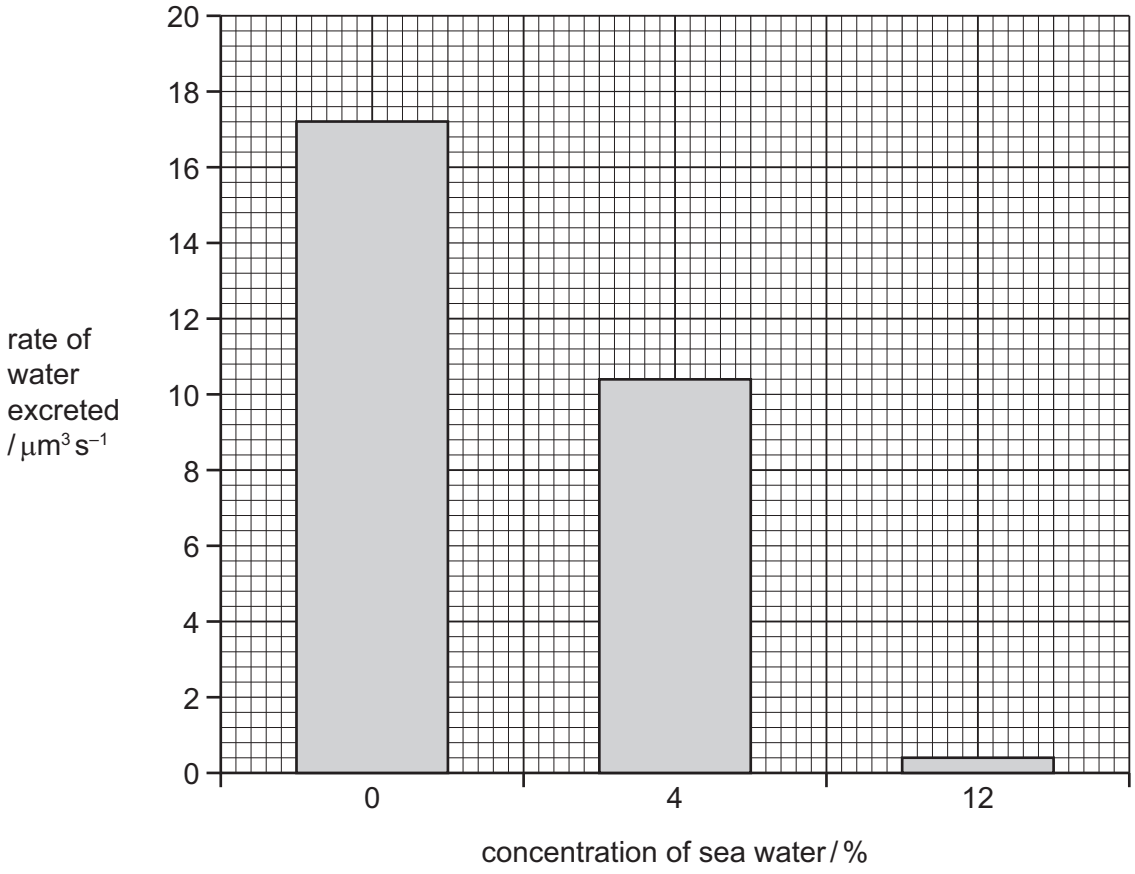

Fig. 4.2

(c) Explain the results shown in Fig. 4.2.

.....

.....

.....

.....

.....

.....

..... [3]

(d) Single-celled organisms with cell walls do not have contractile vacuoles. Suggest why.

.....

.....

.....

.....

.....

.....

..... [3]

[Total: 12]

© UCLES 2016

5 A researcher investigated the population growth of fish for fish farming. The researcher stocked a farmer's lake with a small number of these fish and recorded the number of fish over the next five years. The researcher's results showed that the population of fish had increased exponentially.

(a) **(i)** Use the axes to show the **exponential growth** in the population of fish.

Label the axes and draw a suitable curve.

[3]

(ii) Explain why the population of fish increased exponentially.

.....

.....

.....

.....

.....

.....

.....

.....

..... [4]

Fig. 5.1 shows the total mass of wild fish caught worldwide between 1950 and 2012 and the mass of farmed fish produced worldwide over the same period.

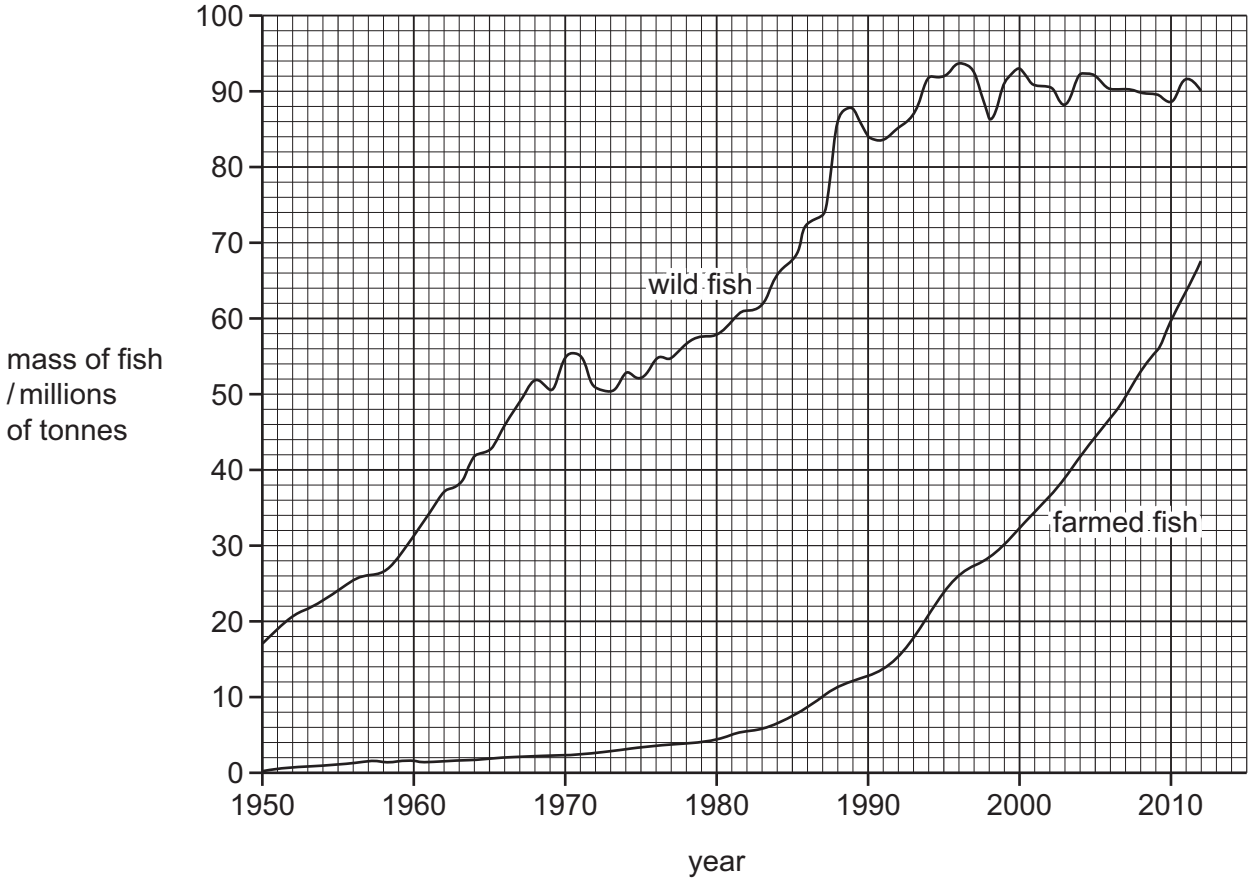

Fig. 5.1

(b) Describe the changes in the mass of **wild fish** caught between 1950 and 2012.

You will gain credit if you use data from Fig. 5.1.

.....

.....

.....

.....

.....

.....

..... [3]

(c) It is predicted that wild fish stocks will decrease and become depleted because of overfishing.

Suggest ways in which governments can try to maintain the stocks of wild fish.

.....

.....

.....

.....

.....

.....

.....

.....

.....

.....

.....

.....

..... [6]

(d) Like fish stocks, forests can be a sustainable resource.

Discuss what is meant by the term *sustainable resource*, using forests as an example.

.....

.....

.....

.....

.....

.....

..... [3]

[Total: 19]

6 **(a)** State the balanced chemical equation for photosynthesis.

..... $\xrightarrow[\text{chlorophyll}]{\text{light}}$ .....

[2]

A student investigated the effect of different wavelengths of light on the rate of photosynthesis of the water plant, *Cabomba*.

The student used the apparatus shown in Fig. 6.1.

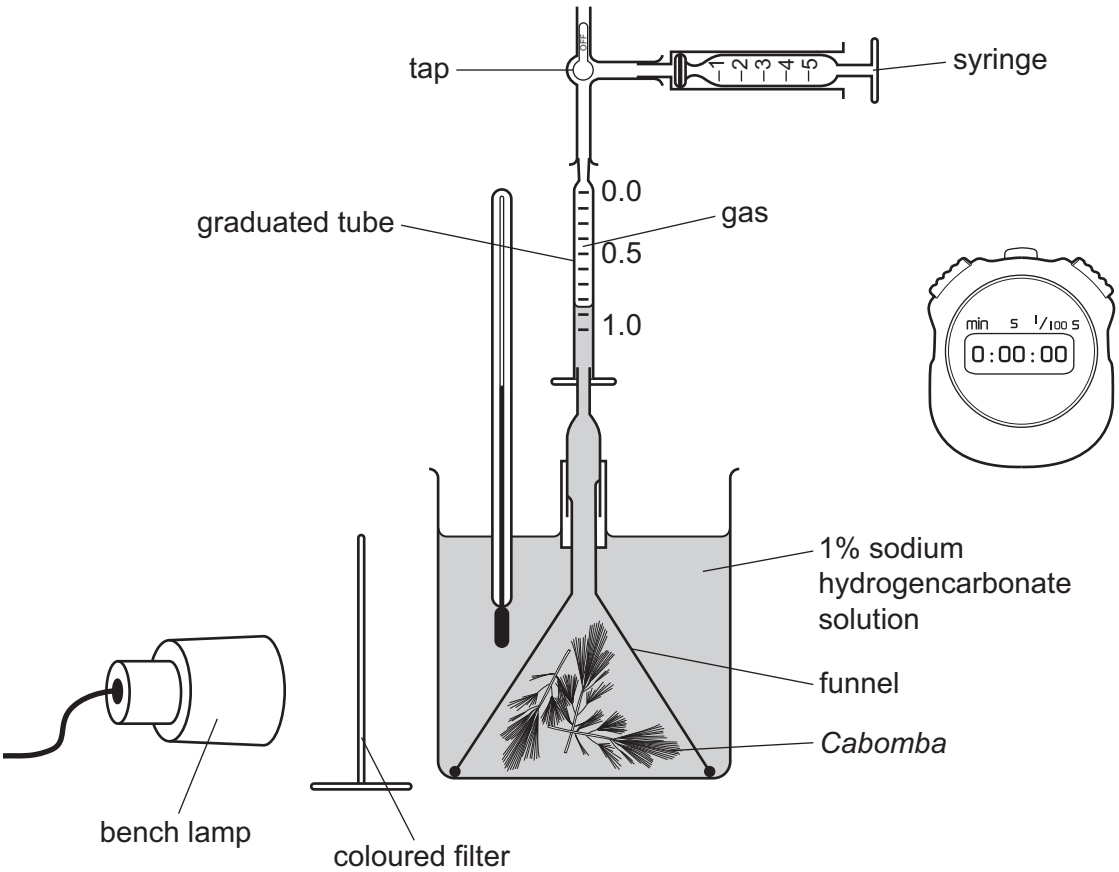

Fig. 6.1

(b) The student collected the gas produced by the plant for five minutes. The results are shown in Table 6.1.

Table 6.1

colour of filter	wavelength of light / nm	volume of gas collected / cm^3
violet	400	0.80
blue	475	0.80
green	550	0.20
yellow	600	0.40
red	675	0.90

Describe the effect of wavelength of light on the rate of photosynthesis as shown in the student's results in Table 6.1.

You will gain credit if you use data from the table.

.....

.....

.....

.....

.....

.....

..... [3]

(c) State how the student would calculate the rates of photosynthesis from the results in Table 6.1.

.....

..... [1]

(d) State why the student:

(i) kept the lamp at the same distance during the investigation,

.....

.....

..... [1]

(ii) used sodium hydrogencarbonate solution.

.....

.....

..... [1]

(e) State **three** uses in a plant of the carbohydrate produced in photosynthesis.

1.....

2.....

3.....

[3]

[Total: 11]

Permission to reproduce items where third-party owned material protected by copyright is included has been sought and cleared where possible. Every reasonable effort has been made by the publisher (UCLES) to trace copyright holders, but if any items requiring clearance have unwittingly been included, the publisher will be pleased to make amends at the earliest possible opportunity.

To avoid the issue of disclosure of answer-related information to candidates, all copyright acknowledgements are reproduced online in the Cambridge International Examinations Copyright Acknowledgements Booklet. This is produced for each series of examinations and is freely available to download at www.cie.org.uk after the live examination series.

Cambridge International Examinations is part of the Cambridge Assessment Group. Cambridge Assessment is the brand name of University of Cambridge Local Examinations Syndicate (UCLES), which is itself a department of the University of Cambridge.

© UCLES 2016